PHDEVB35-X HV Plug-and-Play

Driver Board Manual

PHVDREVB35-X is a driver board which specially designed for 3300V HV IGBT with"plug and play" function. It also can drive high power IGBT module with 2500V and 1700V. This board is workable for IGBTs in series and parallel connection and providing work mode option for skipped stitches switching and signal output interface for parallel connection.

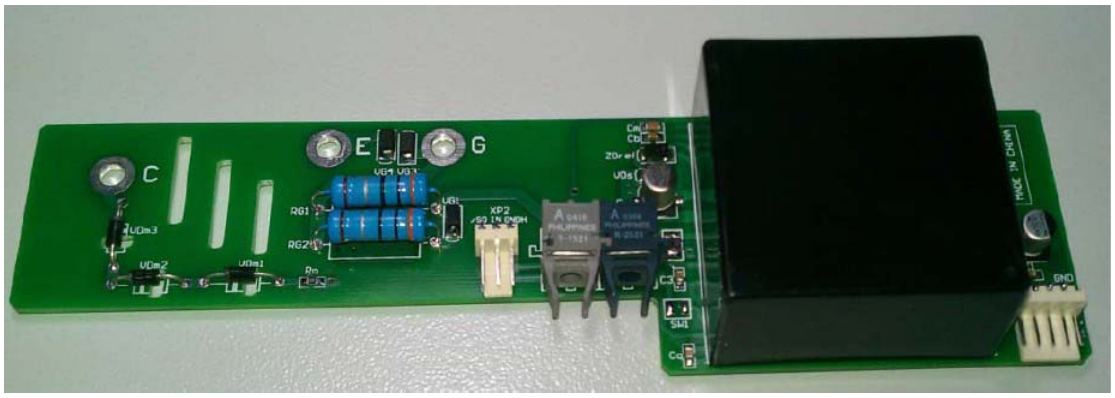

PHVDREVB35-X HV driver board adapts optical fiber driver with integrated HV insulation DC/DC power supply inside. It has function for over-current protection and under-voltage protection.

1. Main technical data

* Switching Frequency: 0～150KHZ
* Duty Ratio: 0 ～100%
* Blocking Voltage: ≤3500V
* Rating Input Voltage: 15V（±0.5V）
* Max Drive Current: ±15A ~ ±32A
* DC/DC Power: 6W~10W
* Rated Drive Voltage: +15V/-15V
* Operation Temperature Range: -40℃～+85℃

2. Characteristic Features

Index \ Model	PHVDREVB35-515	PHVDREVB35-620	PHVDREVB35-1032
IGBT V_{CE}	3500V	3500V	3500V
f_{max}	100kHz	150kHz	150kHz
Isolation Voltage（AC,RMS,10S）	8kV	8kV	8kV
Power Supply	15V	15V	15V
Output Peak Current	±15A	±20A	±32A
Insulation DC/DC Power	6W	6W	10W
Td (on)	110nS	110nS	110nS
Td (off)	100nS	100nS	100nS

3. Applications

PHVDREVB35-X HV driver board can be widely applied to any kinds of HV inverter and converter, high speed railroad motor driving, railroad power supply systems and power converter in power engineering projects.

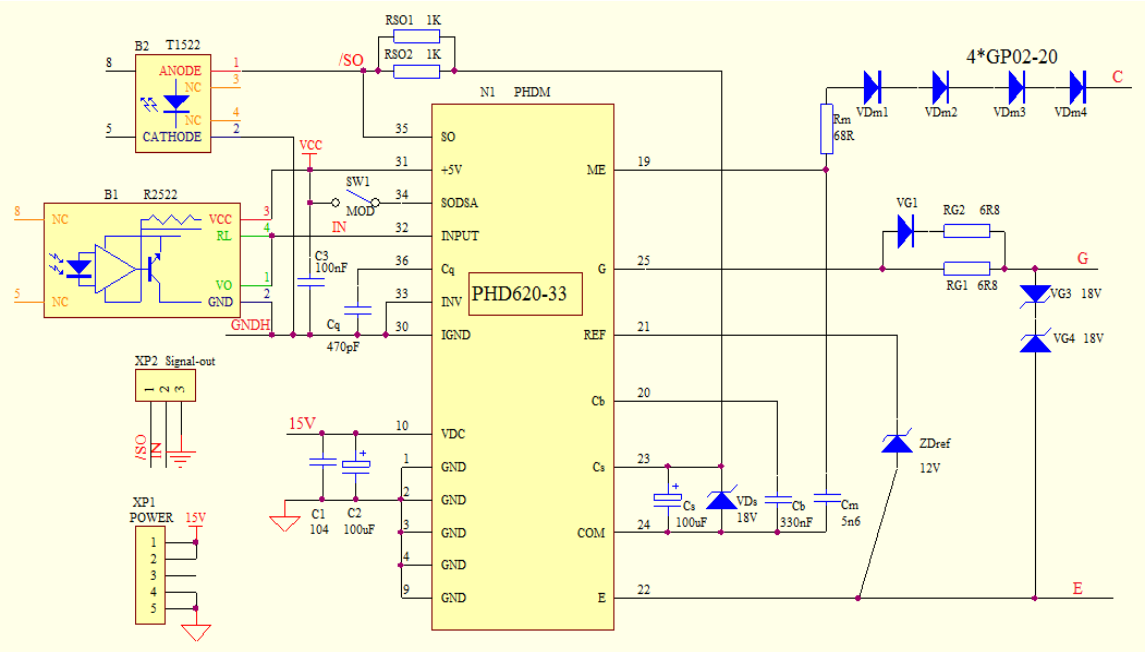

Schematic circuit diagram

Pin Designation of connector:

Pin / Code of connector	1	2	3	4	5
XS1	15V	15V		GND	GND
	Power supply	Power supply			
XS2	/SO	IN	GND		
	Failure output	parallel connection drive signal IN/OUT			

4. Signal Logic Relationship

When the input optical fiber for PHVDREVB35-X is light up, the driver output is high. The emitter of optical fiber is light up status in normal condition and it will be blanking level when failure signal happened and light up again until the failure signal clear up.

The driver board has input pulse acknowledgement function, i.e. once input an efficient pulse signal, the driver board will always feedback an acknowledgement signal.The acknowledgement feedback mode is the emitter of optical fiber will put out once input an efficient pulse signal. The put out time is 0.5uS.

5. Work Mode Setting

PHVDREVB35-X HV driver board can set up the work mode through "SW1" on the board. The default of the driver board is mono-tube independent working mode. If short circuit SW1, the driver board will be under in series connection or parallel connection work mode. The main driver board and deputy driver board can connect driver signal and failure signal through parallel driver interface "XP2" under parallel work mode.

6. Failure Protection Mode:

When over-current protection and under-voltage protection happened, the default protection mode of driver board is output -15V to turn off the IGBT modules immediately and transmit the failure signal to customer controller through emitter of optical fiber until the blocking time elapse. This blocking time is about 200mS.

But if short circuit SW1, when over-current protection and under-voltage protection happened, the driver board will not turn off the IGBT modules immediately, only transmit the failure signal to customer controller through emitter of optical fiber, and the driver signal will be turn-off by the customer controller.

Short circuit SW1 is mainly used for in-series connection work mode in order to avoid the other IGBT breaking by over voltage while the one IGBT turn off under in-series connection work mode. When under in-series connection work mode, the driver board will not turn off IGBT immediately, only transmit the failure signal to customer controller through emitter of optical fiber, then the customer controller will turn off the driver signal of the two IGBTs at the same time.

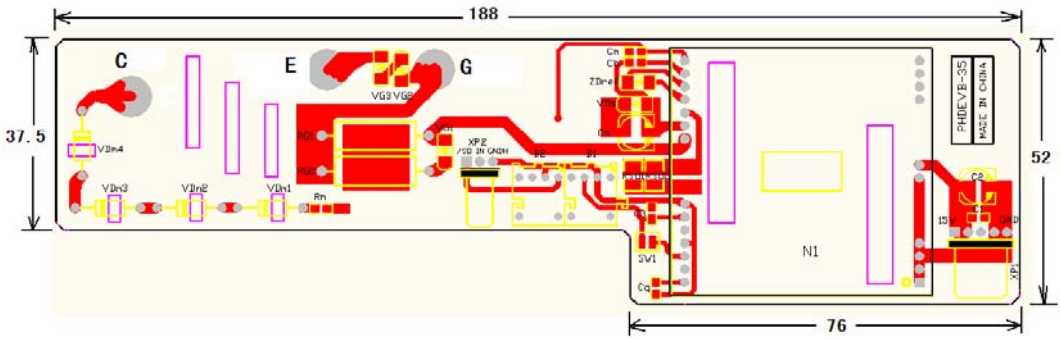

PHVDREVB35-X dimension (Unit: mm)

PHVDREVB35-X is workable for 3.3KV IGBT modules manufactured by INFINEON and ABB directly.

Notes:

When work under +85℃ ~ +105℃,reduce 30% power of the driver;

When work under +105℃ ~ +125℃,reduce 50% power of the driver.

WEPOWER TECHNOLOGY CO.,LTD
A333,Floor 3rd,Tower A,No.168 Baoyuan Road,
Shenzhen Famous Industrial Product Display
and Souring Center,Xixiang Twon,Bao'an
District,Shenzhen,518102 -CHINA
Tel: +86-755-27796280
Fax:+86-755-27914685
Email: sales@wepowertech.com
Website: www.wepowertech.com